Multievacuator 120 -140 -175

The Kongskilde Multievacuator is uniquely designed for high capacity suction conveying.

In combination with Kongskilde's OK160 pipe system, complete systems for suction and/or blowing conveying can be tailormade for conveying of granules or regrindmaterial. A Multievacuator solution ensures a more uniform material feeding rate.

Description
The Multievacuator-unit is a combined blower and cyclone, which is designed for suction of granular materials. The top part, containing the blower, can be opened for easy cleaning and change of cyclone filter basket.

Function
The blower creates the vacuum necessary to pick up the material from point A and discharge it through the cyclone and a rotary valve to point B, either directly or through a discharge line.

Application
When handling materials containing high quantities at dust, it is recommended that the outlet of the Multievacuator will be connected to a filter.

A typical application for the Multievacuator is conveying of virgin material or regrind as indicated by the illustrated installations.

KONGSKILDE

Technical Data

The Multievacuator is designed for continuous discharge of material through an RF 20 rotary valve.

If the Multievacuator is used as a suction unit, a RF 20 E-type should be used. If the Multievacuator is used as a suction-blowing unit, a RF 20 D-type should be applied. Please note that the valve is not standard on the Multievacuator and must be ordered separately.

Multievacuator	**120**	**140**	**175**
Motor (kW)	1.5	3.0	5.5
Rpm (50 Hz)	2900	2900	2900
Nominal consumption (Amp.) 50 Hz, 400 V	3.3	6.15	11.0
Weight, kg	135	144	172

1. Regrind evacuation from granulators
The Multievacuator is unique for the evacuation of regrind material from shredders and granulators. It creates a high vacuum and thereby ensures sufficient airflow through the granulator for cooling. No material passes through the fast moving fan wheel, thus no additional dust is created in the material. When used in combination with the Kongskilde Aspirator solutions, the Multievacuator feeds regrind material to the Aspirator, where the material is cleaned and thereafter ready for re-use.

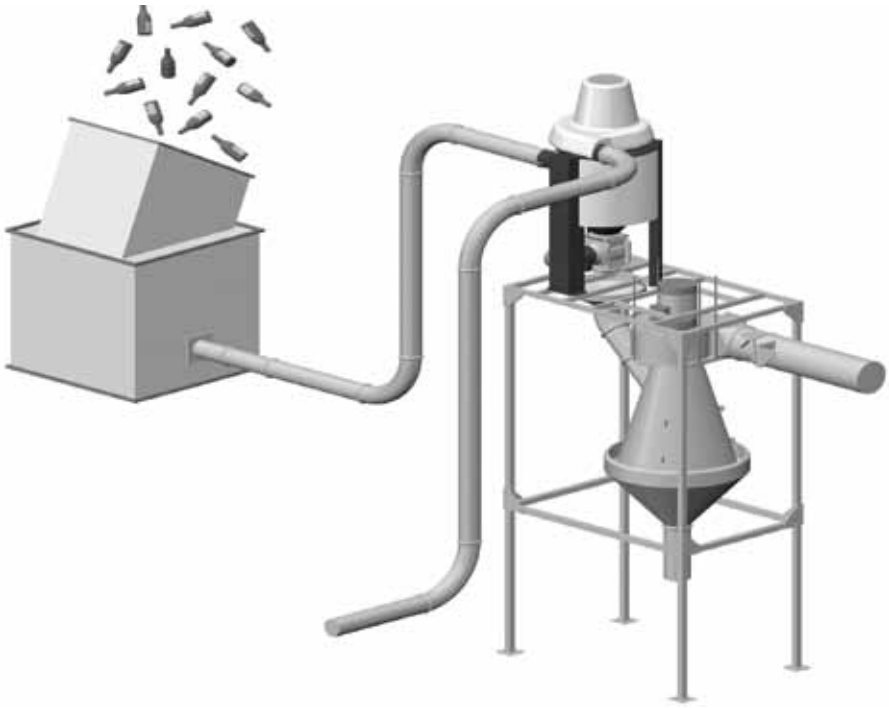

2. Conveying of granulate
The Multievacuator is very suitable for bulk conveying of virgin and regrind material from a gaylord or container to a moulding machine or extruder.

Capacity

The indicated conveying capacities are for granulate with a bulk density of 650 kg/m^3 in OK160 piping and 4 meter vertical conveying. The conveying distance is the total length of all horizontal and vertical piping in the conveying line. For the suction systems the conveying capacities are shown with and without filter on the blower outlet.

Capacity Correction
If the Multievacuator evacuates material from a granulator or shredder,the capacity could be reduced due to the back pressure in the granulator or shredder. The table indicates recommended correctional factors, which should be used in these cases.

Example:
If a Multievacuator 175 evacuates material from a granulator with a back pressure of 200 mm WG, a factor 0.66 should be used. Thus, the conveying capacity is multiplied by 0.66.

Correctional factors

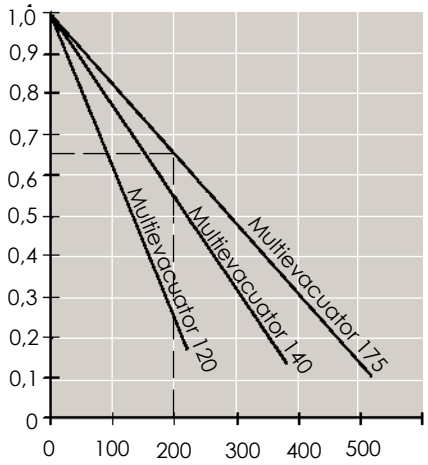

Back pressure [mmWG]
(e.g. granulator/shredder)

Suction system
Suction line with "short" suction head and two 90° bends.

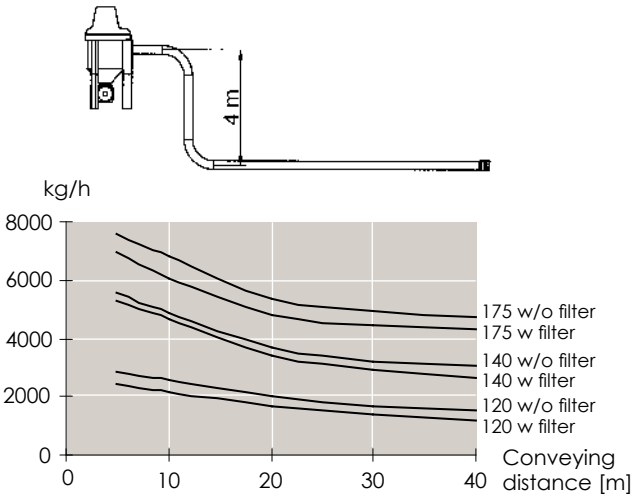

Suction system
Suction line with vertical "round" suction head, 2.5 meter poly-hose and two 90° bends.

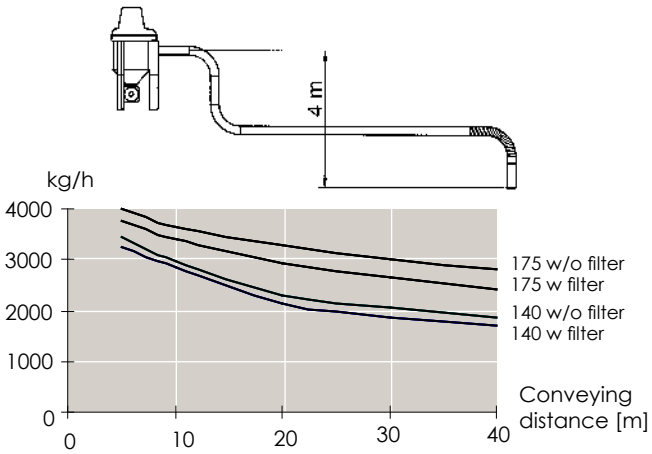

Suction-blowing system
Suction line with "short" suction head and two 90° bends. Blowing line with two 90° bends and one outlet cyclone.

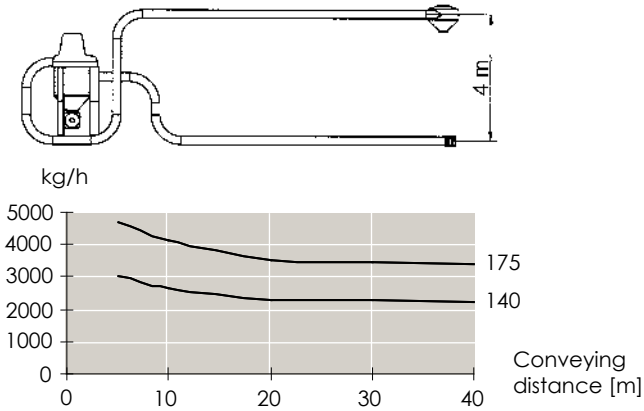

Suction-blowing system
Suction line with vertical "round" suction head and 2.5 meter poly-hose. Blowing line with two 90° bends and one outlet cyclone.

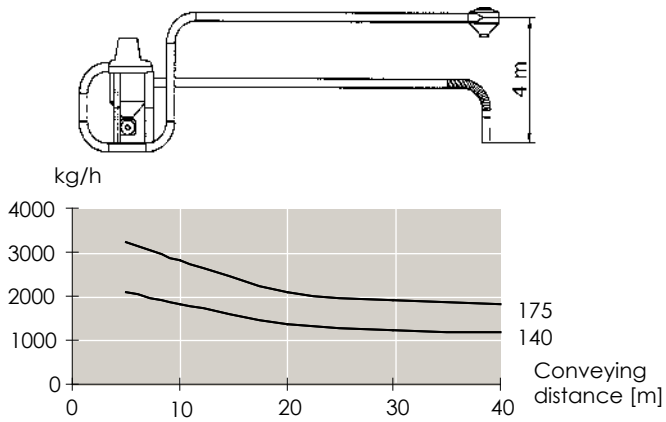

Dimensions [mm]

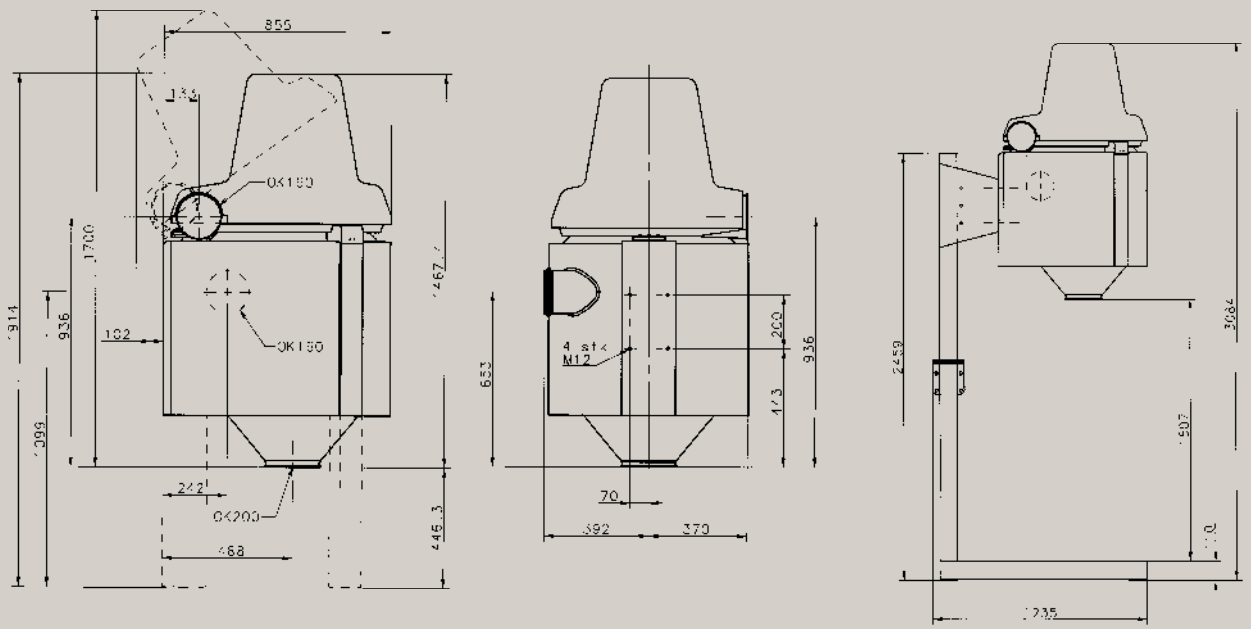

Dimensions with filter [mm]

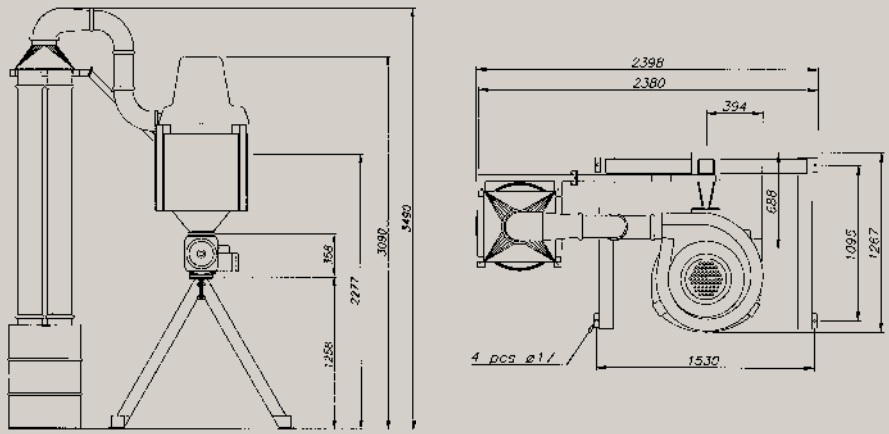

Accessories

- Legs for placing the Multievacuator on the floor allowing mounting of rotary valve on outlet.
- Stand for Multievacuator, for filling of gaylords.
- Filter bag and manifold for connection to blower outlet. Bracket included for mounting on stand.

Kongskilde U.K. Ltd
Tel.: 01263 713 291
mail@kuk.kongskilde.com
www.kongskilde.com

adding value
to the green world

Subject to modification 123001699 KUK/GB/Multievacuator/DATA/0313